EV2216W

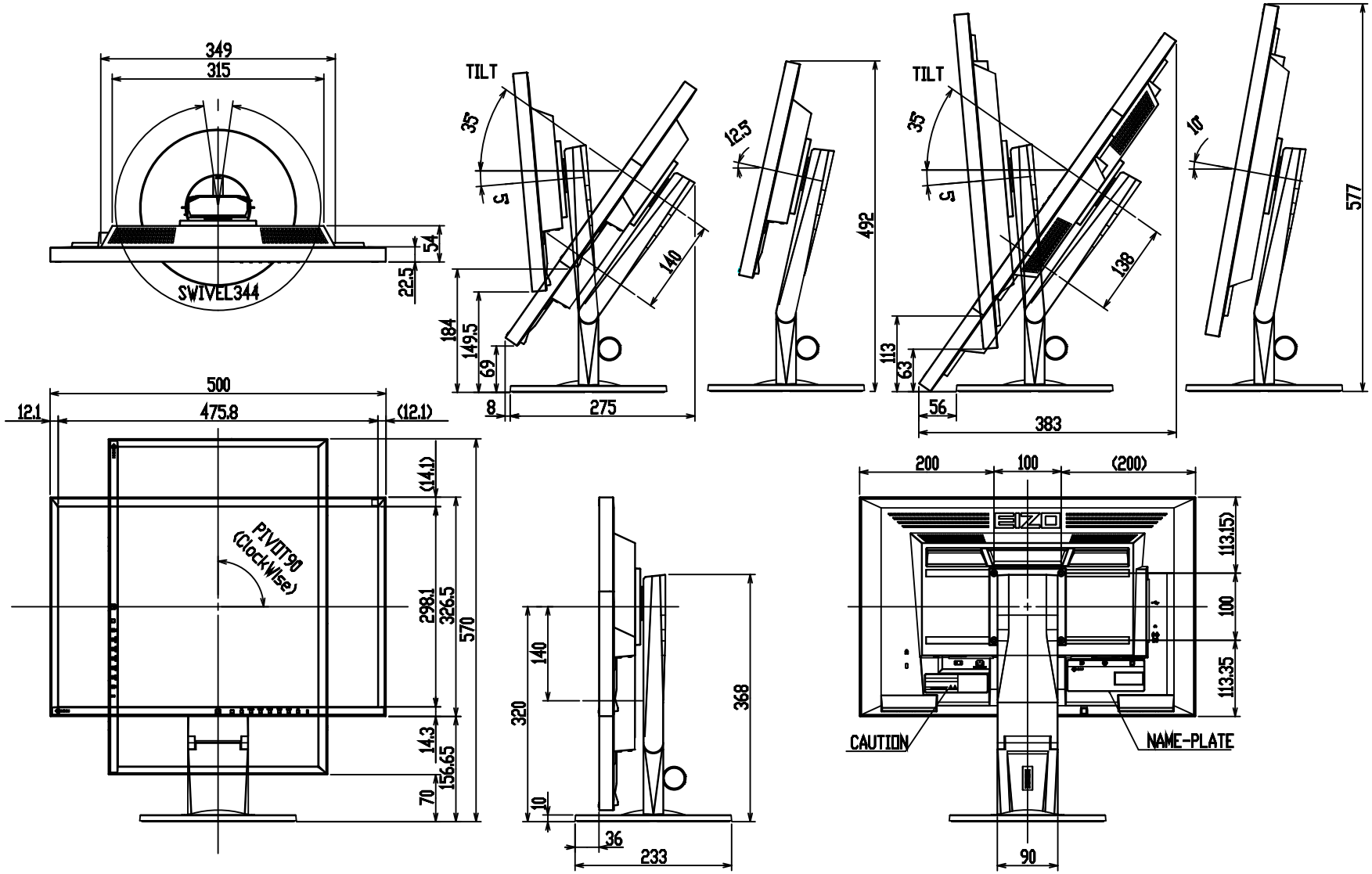
349
315
54
22.5
SWIVEL344
TILT
35°
5°
140
184
149.5
69
8
275
12.5°
492
TILT
35°
5°
138
113
63
56
383
10°
577
500
12.1
475.8
(12.1)
(14.1)
PIVOT 90
(ClockWise)
298.1
326.5
570
14.3
156.65
70
140
320
10
36
233
368
200
100
(200)
113.15
100
113.35
CAUTION
NAME-PLATE
90